Department of consumer and corporate affairs / Ministère de la consommation et des corporations

STANDARDS BRANCH - DIRECTION DES NORMES

NOTICE OF APPROVAL G-46

OTTAWA October 9, 1969.

SPRAGUE METER DIVISION, TYPES 175C, 240C and 250C
STANDARD AND TEMPERATURE COMPENSATED,
COMBINATION POSITIVE DISPLACEMENT GAS METERS AND PRESSURE REGULATORS

Apparatus

	Types 175C	Type 240C	Type 250C
Badged capacity, cu. ft./hr. (air)	140	192	200
Differential pressure at badged capacity	0.5 w.g.	0.5 w.g.	0.5 w.g.
Capacity per revolution, cu. ft.	0.111	0.111	0.111
Maximum working pressure, psig	5	5	5
Diaphragm designation	G-4	G-4	G-4
Temperature compensator activity (T.C. Meters)	0.00315"/°F	0.00315"/°F	0.00315"/°F
Base temperature (T.C. Meters)	60°F	60°F	60°F
Tangent to 2 cu. ft. test dial rev. ratio	18:1	18:1	18:1
Meter connections, top, male or female	3/4"NPT	3/4"NPT	3/4"NPT

Pressure Regulator Specifications

Meter Type	Inlet Pressure Range, psig	Inlet Orifice Dia.	Delivery Pressure
175C	5.0 to 75	3/16"	5-9" w.g.
175C	0.5 to 5.0	5/16"	5-9" w.g.
240C, 250C	10 to 75	3/16"	5-9" w.g.
240C, 250C	2 to 10	5/16"	5-9" w.g.
240C, 250C	0.5 to 2.0	3/8 "	5-9" w.g.

Approved adjustment spring for the regulator is designated Type B and is colour-coded green.

SPRAGUE METER DIVISION, TYPES 175C, 240C and 250C STANDARD AND TEMPERATURE COMPENSATED COMBINATION POSITIVE DISPLACEMENT GAS METERS AND PRESSURE REGULATORS

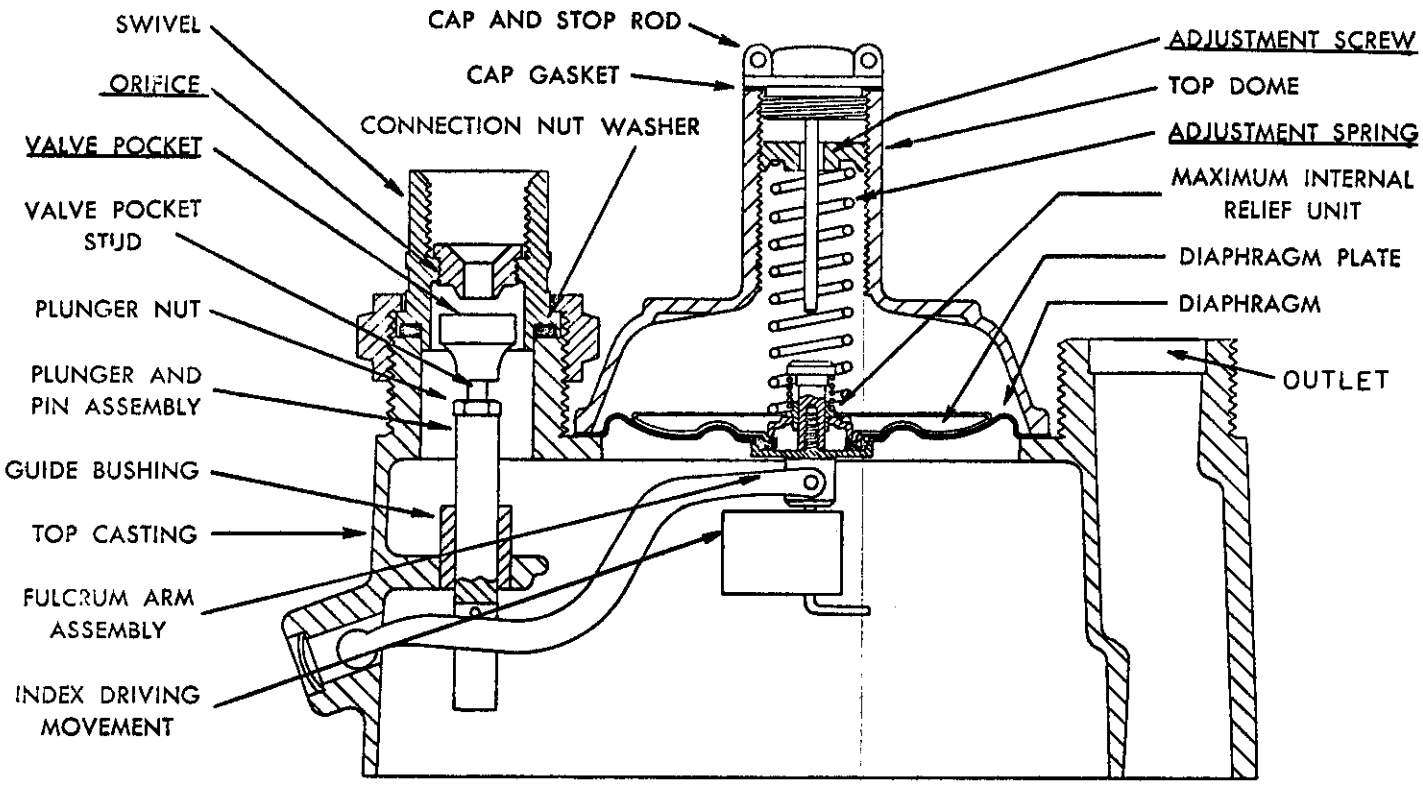

FIG. 1

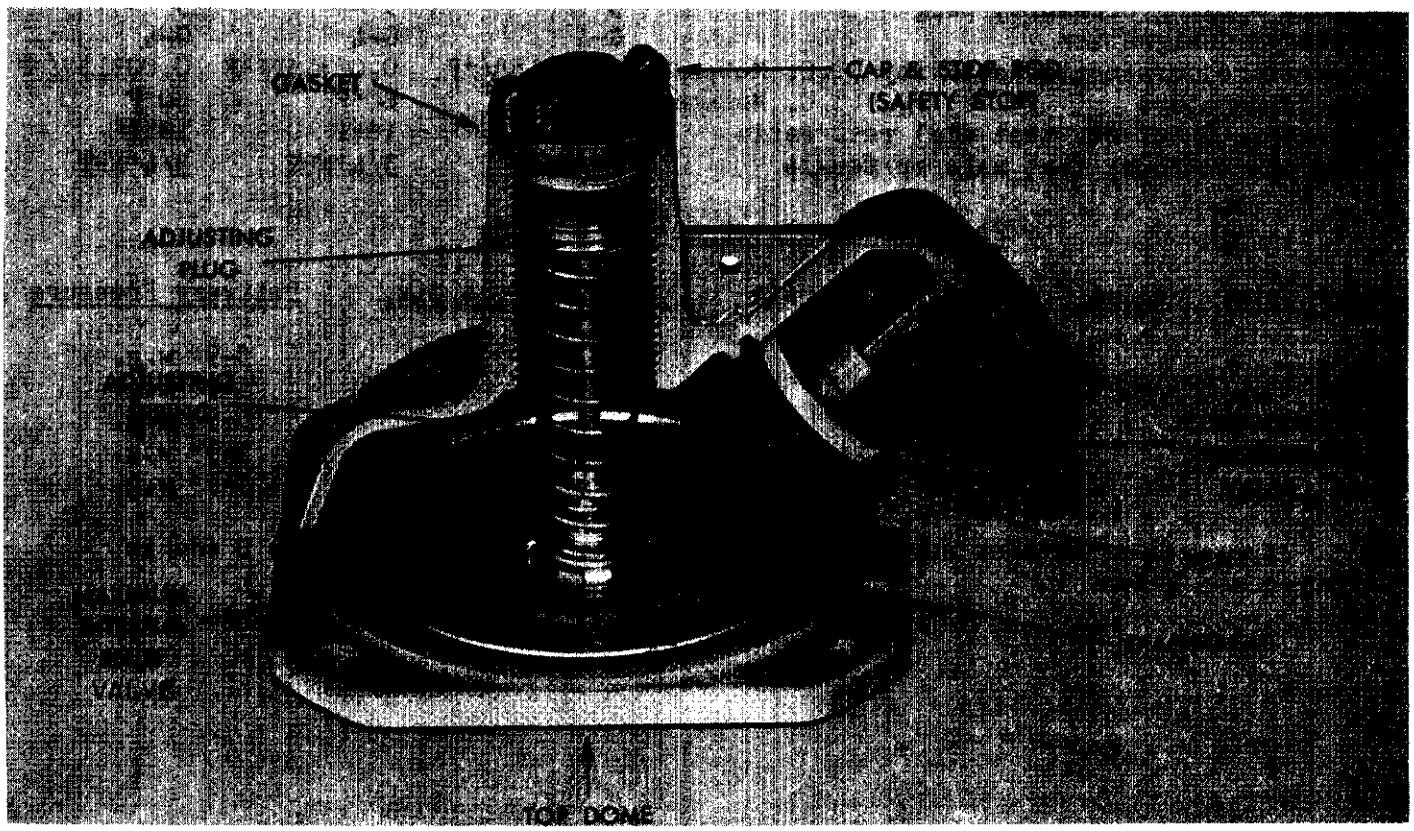

FIG. 2

SPRAGUE METER DIVISION, TYPES 175C, 240C and 250C STANDARD AND TEMPERATURE COMPENSATED COMBINATION POSITIVE DISPLACEMENT GAS METERS AND PRESSURE REGULATORS

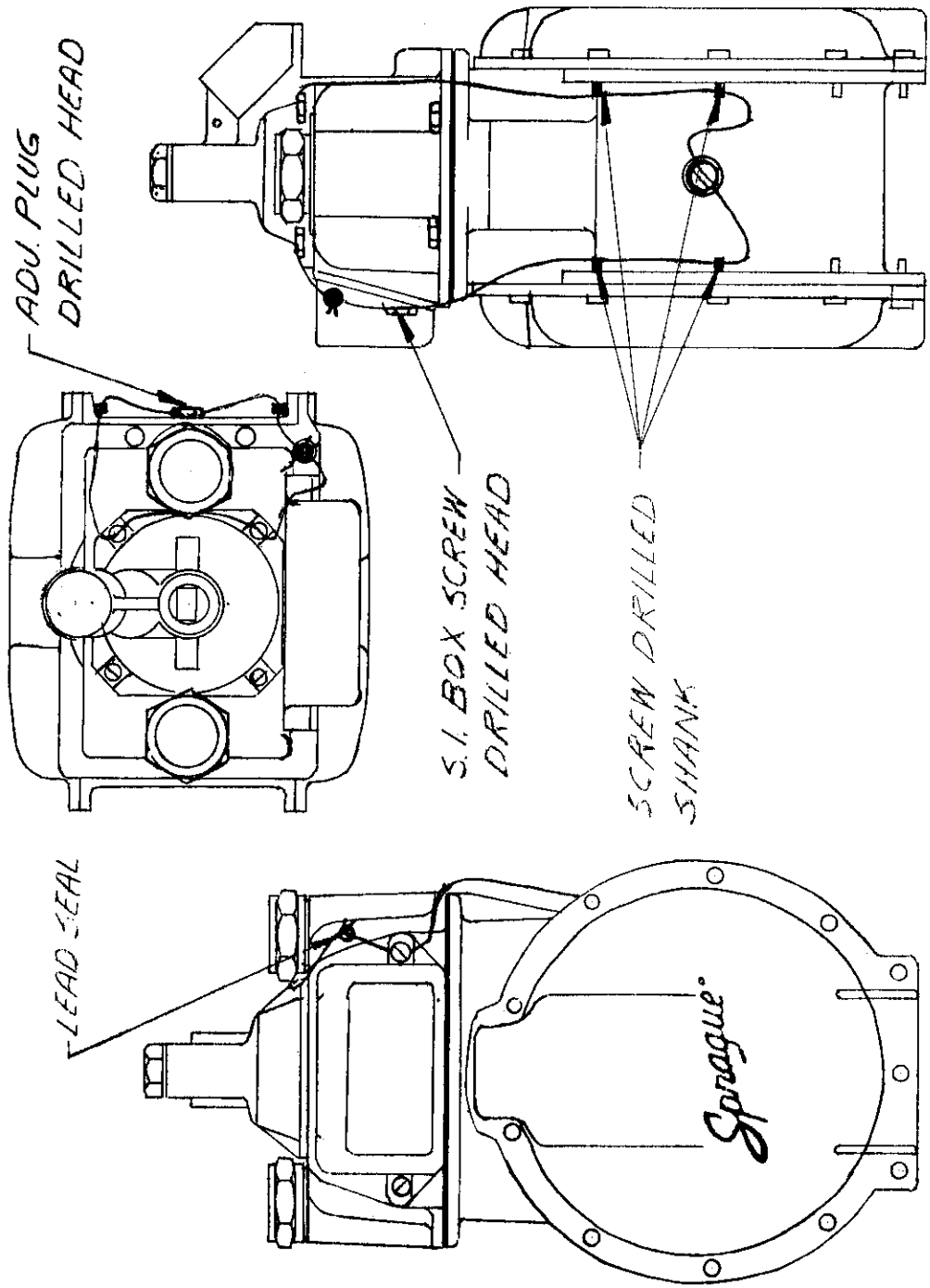

THE Sprague METER COMPANY
BRIDGEPORT, CONN.

SPRAGUE CANADA
COMB. SEALING DEVICE
175-240-250 COMB. S.I.

SCALE	DR. EL	9/12/68	PART NO.
TOLERANCE UNLESS OTHERWISE NOTED	CHK.	9-12-68	DWG. NO. V-2289
FRAC. ± DEC. ± ANG. ±	APP'D.	9-12-68	REV.
RELEASE SR 01901 9-12-68			

CHANGE | DATE

ISSUED
SEP 13 1969

SPRAGUE METER DIVISION, TYPES 175C, 240C and 250C STANDARD AND TEMPERATURE COMPENSATED, COMBINATION POSITIVE DISPLACEMENT GAS METERS AND PRESSURE REGULATORS

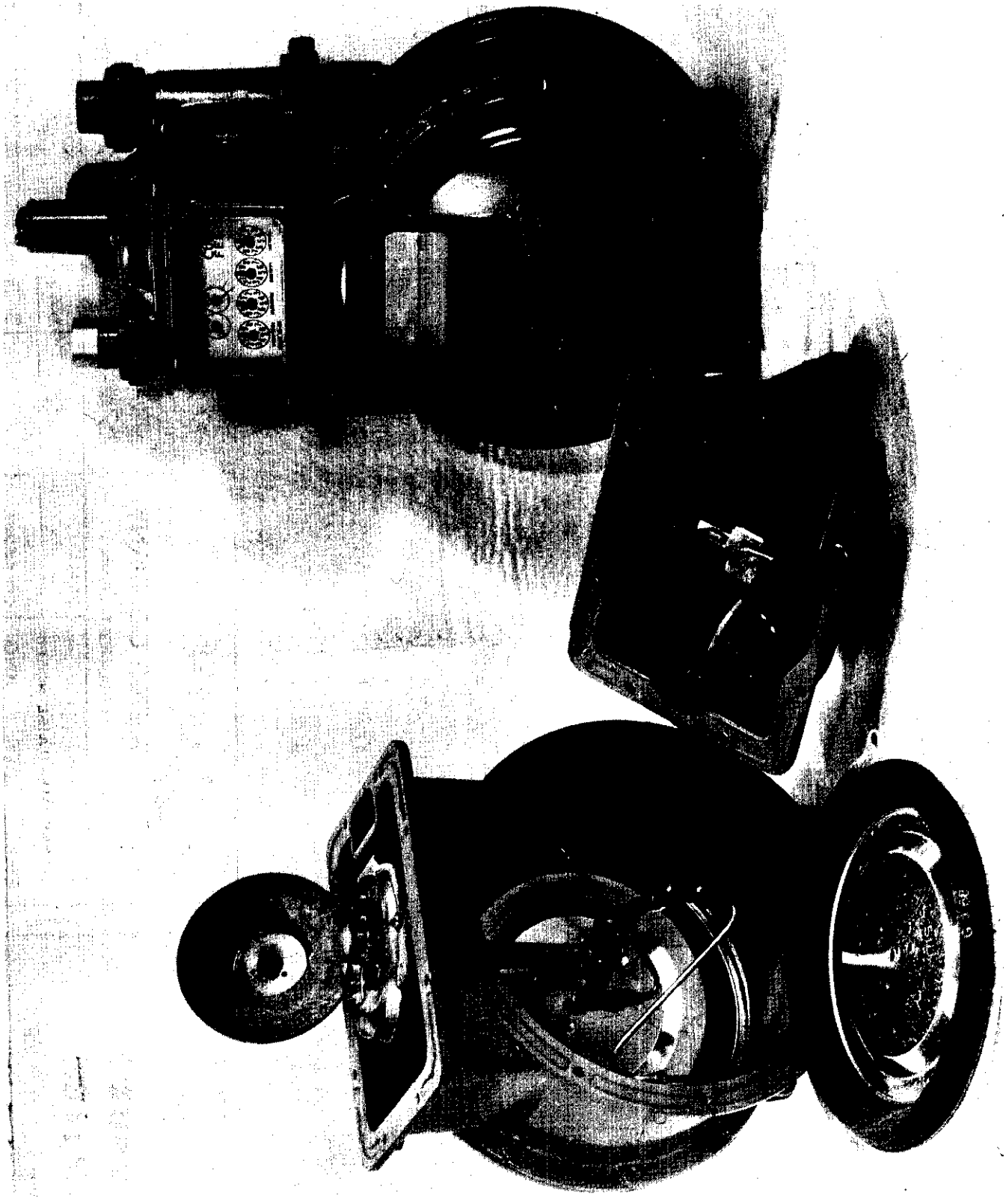

Description

The combination meters approved herein are basically the same as Types 175, 240 and 250 meters approved under Circular G-43, except for the top castings of the meters which carry pressure reducing, adjustable, regulators with associated components, illustrated in figures 1 and 2.

The meters connect directly to the line, which may carry gas at pressures considerably higher than houseline pressure according to the regulator specifications listed above. The delivery pressure is set by the tension of the adjusting spring and is also a function of the inlet pressure and the size of the orifice at the inlet valve pocket.

The regulator is designed to provide over-pressure protection by incorporating a mechanical relief valve which begins to open at approximately 7 inches water gauge pressure above the spring set pressure. This relief valve prevents the pressure in the houseline from exceeding 2 psig. A controlled breather valve serves to vent the overpressure gas to atmosphere in the event of regulator failure.

These combination meters may be tested in the field using a bell prover as a standard of comparison, but it must be emphasized that the swivel with its orifice and the valve pocket with the plunger-pin assembly must be removed from the inlet side of the meter before such tests are performed. (Ref. Fig. 1).

Each meter shall have a nameplate which has the name of the manufacturer the meter's type designation, its capacity in cubic feet per revolution and cubic feet per hour air at ½" w.c. differential, the meter's working pressure in psi and the serial number of the meter. Temperature compensated meters shall also have an inscription "Temp. Comp. 60°F Base".

Each meter shall be sealed according to the attached drawing, Sprague Dwg. No. V2289.

It will be the responsibility of the utility to verify that the regulator is equipped with the correct adjusting spring and suitable orifice size for the applicable pressure range.

With regard to adjustment for pressure and sealing of the regulator cap the utility will treat this regulator in the same manner as separately mounted regulators in the line preceeding conventional domestic gas meters.

The combination meters are approved for use in outdoor locations only.

Approval granted to :

J.S.T. Swanson, P. Eng.,
Chief, Standards Laboratory,
Standards Branch.

Sprague Meter Division of
Textron Canada Ltd.,
Hamilton, Ontario.

W. J. S. Fraser,
Chief, Electricity and Gas Division,
Standards Branch.

Ref: SL-100-597G
SE-85-25